MODULE – 4

Tidal Power: Tides and waves as energy suppliers and their mechanics; fundamental characteristics of tidal power, harnessing tidal energy, advantages and limitations.
Ocean Thermal Energy Conversion: Principle of working, OTEC power stations in the world, problems associated with OTEC.

TIDAL ENERGY

Tidal energy is produced by the surge of ocean waters during the rise and fall of tides. Tidal energy is a renewable source of energy harnessed by converting energy from tides into useful forms of power, mainly electricity using various methods.

TIDES AND WAVES AS ENERGY SUPPLIERS AND THEIR MECHANICS

- Tidal power is taken from the Earth's oceanic tides. Tidal forces are periodic variations in gravitational attraction exerted by celestial bodies. These forces create corresponding motions or currents in the world's oceans.
- Due to the strong attraction to the oceans, a bulge in the water level is created, causing a temporary increase in sea level.
- As the Earth rotates, this bulge of ocean water meets the shallow water adjacent to the shoreline and creates a tide. This occurrence takes place in an unfailing manner, due to the consistent pattern of the moon's orbit around the earth.
- The magnitude and character of this motion reflects the changing positions of the Moon and Sun relative to the Earth, the effects of Earth's rotation, and local geography of the seafloor and coastlines.
- The rise of seawater is called high tide and fall in seawater is called low tide and this process of rising and receding of water waves happen twice a day and cause enormous movement of water. Thus, enormous rising and falling movement of water is called tidal energy, which is a large source of energy and can be harnessed in many coastal areas of the world.

FUNDAMENTAL CHARACTERISTICS OF TIDAL POWER

- Tidal power or tidal energy is a form of hydropower that converts the energy obtained from tides into useful forms of power, mainly electricity.
- Although not yet widely used, tidal energy has potential for future electricity generation.

- Tidal power is the only technology that draws on energy inherent in the orbital characteristics of the Earth–Moon system, and to a lesser extent in the Earth– Sun system.
- Greater tidal variation and higher tidal current velocities can dramatically increase the potential of asite for tidal electricity generation.
- Tidal power is also relatively prosperous at low speeds, in contrast to wind power. Water has one thousand times higher density than air and tidal turbines can generate electricity at speeds as low as 1m/s, or 2.2mph.
- Tidal energy is clean, renewable, and sustainable form of energy resource. It hasno impact on climatebecause it does not produce any greenhouse gases.

HARNESSING TIDAL ENERGY

- **Tidal stream generator**: Tidal stream generators make use of the kinetic energy of moving water to power turbines, in a similar way to wind turbines that use the wind to power turbines. Some tidal generators can be built into the structures of existing bridges or are entirely submersed, thus avoiding concerns over the impact on the natural landscape.
- **Tidal barrage**: Tidal barrages make use of the potential energy in the differencein height (or hydraulic head) between high and low tides. When using tidal barrages to generate power, the potential energy from a tide is seized through the strategic placement of specialized dams. When the sea level rises and the tide begins to come in, the temporary increase in tidal power is channeled into a large basin behind the dam, holding a large amount of potential energy. Withthe receding tide, this energy is then converted into mechanical energy as the water is released through large turbines that create electrical power through the use of generators
- **Dynamic tidal power:** Dynamic tidal power (or DTP) is a theoretical technology that would exploit an interaction between potential and kinetic energies in tidal flows. It proposes that very long dams (for example: 30–50 km length) be built from coasts straight out into the sea or ocean, without enclosing an area
- **Tidal lagoon**: A new tidal energy design option is to construct circular retaining walls embedded with turbines that can capture the potential energy of tides. The created reservoirs are similar to those of tidal barrages, except that the location is artificial and does not contain a pre-existing ecosystem. The lagoons can also be in double (or triple) format without pumping or with pumping that will flattenout the power output.

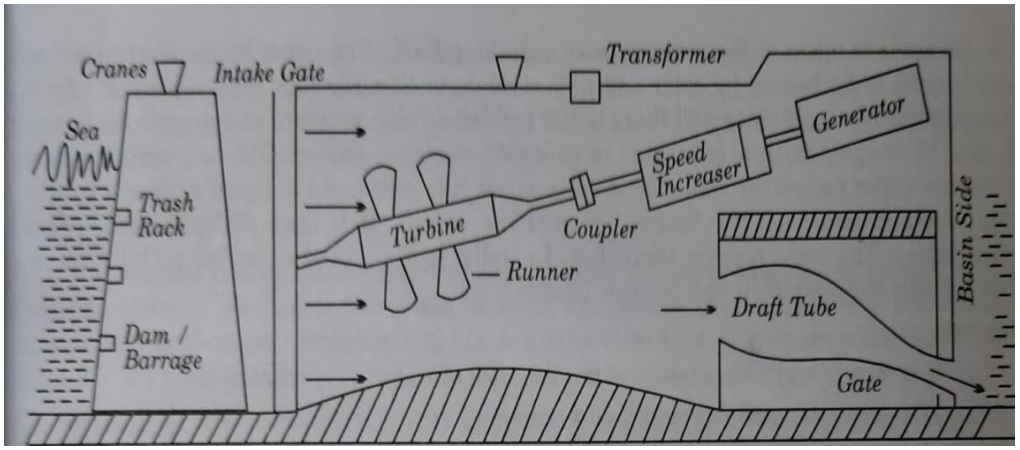

Fig: Schematic layout of tidal power house

The above layout is the tidal power house or tidal power plant that consists of a barrage built across the tidal reach to create pool in which water can be stored. Inside the barrage reversible water turbines and flood gates are installed. Duringthe occurrence of high tide and low tides, the flood gates open and close respectively.

One tide cycle is identified as the shift from low tide to high tide and back to lowtide. The time duration to complete one tidal cycle is approximately 12.5 hours. During this period the pool is filled and empties. Theses may be classified as single basin system and double basin system

LIMITATIONS

- Economic recovery of energy from tides is feasible only at those sites whereenergy is concentrated in the form of tidal range of about 5 m or more and geography provide favorable site for economic construction of a tidal plant, thus it is site specific
- Due to mismatch of lunar driven period of 12.5 hours and human (solar) period of 24 hours, the optimum tidal power generation is not in phase with demand
- Changing tidal range in two weeks period produces changing power
- The turbines are required to operate at variable heads
- Requirement of large water volume flow at low head necessitates parallel operation of many turbines
- Tidal plant disrupts marine life at the location and can cause potential harmto ecology

- It requires very large capital cost at most potential installations
- The location of sites may be distant from the demand centers

TIDAL POWER GENERATION IN INDIA

Long coastline with the estuaries and gulfs in India has a strong tidal range and height to move turbines for electrical power generation

Many organizations and government agencies are busy in the construction of tidal power plants on all those locations and harnessing tidal energy at full capacity. Thereis an ample prospect for tidal power development in India. It has been investigatedthat Gulf of Cambay may prove the biggest tidal energy reservoir for India.

Table Indian Tidal Energy Plant

Site Location	Tide Heights (m)	Estimated Power Potential (MW)
The Gulf of Cambay, Gujarat	11 (6.7 av)	7,000
Gulf of Kutch, Gujarat	8 (5.23 av)	12,000
The Ganges Delta in the Sundarban, West Bengal	5 (2.97)	8,000

Extensive exploration on the western coast in Gulf of Kutch (at Mandva), Gulf of Combay (at Hazira), Maharashtra (at Janjira and Dharmata) and also in Hoogali, Chhatarpur, and Puri on Eastern coast may be worth attempting. Nevertheless, the possibility of developing tidal power scheme in India may be examined in thefollowing all aspects:

- Economic aspects of tidal power schemes when compared to the conventional schemes.
- Problems associated with the construction and operation of plant.
- Problems related to the hydraulic balance of the system in order to minimizethe fluctuation in the power output.
- Environmental effects of the schemes

CLASSIFICATION OF TIDAL POWER PLANT

- Single basin arrangement
- Double basin arrangement

SINGLE BASIN ARRANGEMENT

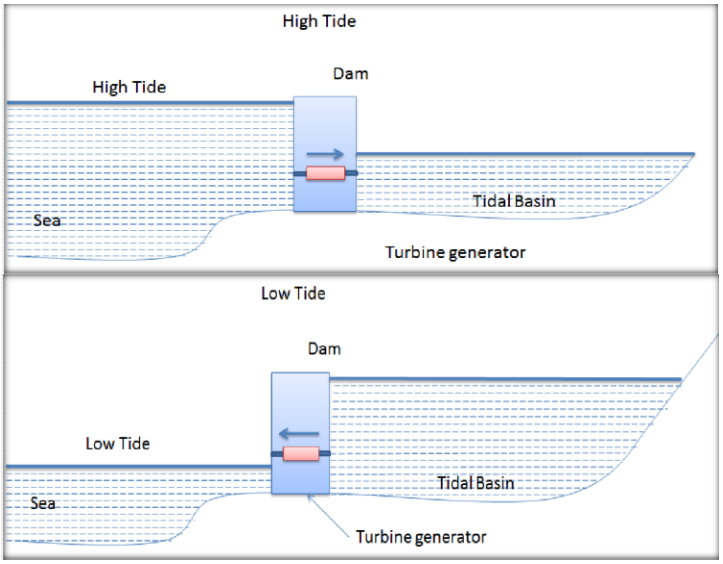

The general arrangement of a single basin system is shown above. Since only one basin interacts with the sea, power can be generated at regular intervals. A dam separates basin and sea. The power house is installed inside the dam. During High Tide, i.e., when the sea level rises, the turbine valves are opened and the sea waterflows into the basin through the turbine generating power. The power is generated till the level of sea water and basin is equal. The water is allowed to pass into the basin,till the level reaches its maximum position. During low tide, the level of basin is morethan the level of seawater.

After attaining sufficient head, the turbine valves are opened and water flows from basin to sea through the turbine generating power. Tidal power plants normally use reversible water turbines, such that power is generated in both the directions. A Single basin arrangement system can be classified as:

1) *Single-ebb system*: Water is stored during High tide in the basin and power is generated only during
Low tide.

2) *Single-Tide system*: Power is generated only during High tide and it fills the basin.The water is drained out during low tide.

3) *Double cycle system*: Power is generated during both high tide and low tide as explained above.

DOUBLE BASIN ARRANGEMENT

Two Basin system

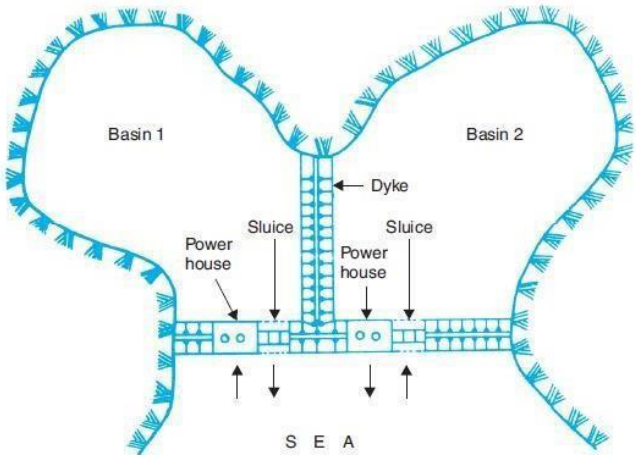

Figure above shows a schematic diagram of two-basin system. In the system, the two basins close to each other operate alternatively. One basin generates power when the tide is rising (basin getting filled up) and the other basin generates power while the tide is falling (basin getting emptied). The two basins may have a common power house or may have separate power house for each basin. In both the cases, the powercan be generated continuously.

ADVANTAGES OF TIDAL POWER PLANT

- It is independent of rain, and inexhaustible.
- Large area of valuable land is not required.
- When a tidal power plant works in combination with thermal or hydro-electricpower plant, peak power demand can be met effectively.
- Free from pollution.

DISADVANTAGES OF TIDAL POWER PLANT

- Power generation is not uniform.
- Life of turbines reduces due to corrosive seawater.
- Construction of dams in sea is difficult.
- The power transmission cost is high as it is located away from load centres.
- The plant efficiency is not uniform.
- Sedimentation and siltation of basins.

OCEAN THERMAL ENERGY

About 70% of earth's surface is covered by ocean which is continuously heated by solar heat. Solar heat is stored as uneven distribution of heat between warm surface water and cold deep ocean water (called gradient) from where it is harnessed as ocean thermal energy

PRINCIPLE OF WORKING

The basic principle of ocean thermal energy conversion (OTEC) is explained asfollows:

Closed cycle OTEC

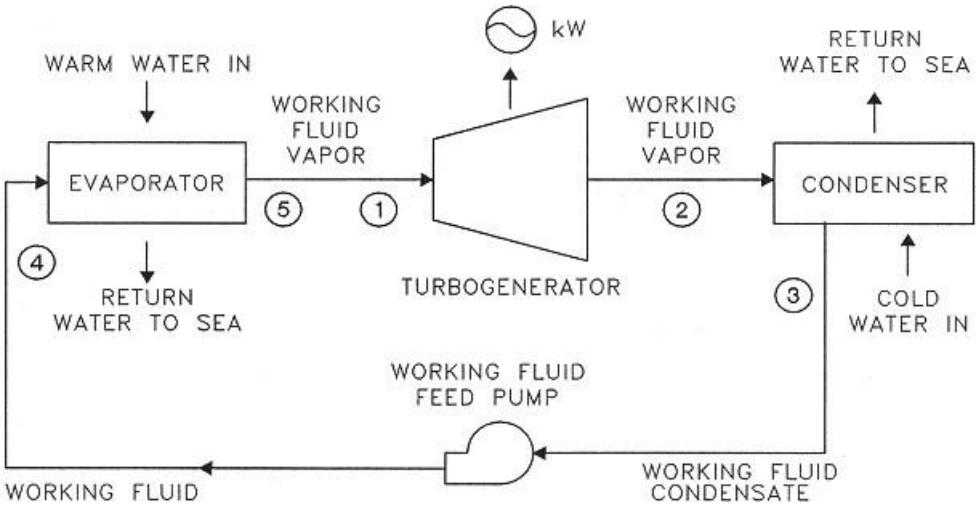

Closed-cycle systems use fluid with a low-boiling point, such as ammonia, to rotate a turbine to generate electricity. Here's how it works. Warm surface seawater is pumped through a heat exchanger where the low-boiling-point fluid is vaporized. The expanding vapor turns the turbo-generator. Then, cold, deep seawater—pumped through a second heat exchanger—condenses the vapor back into a liquid, which is then recycled through the system.

Open cycle OTEC

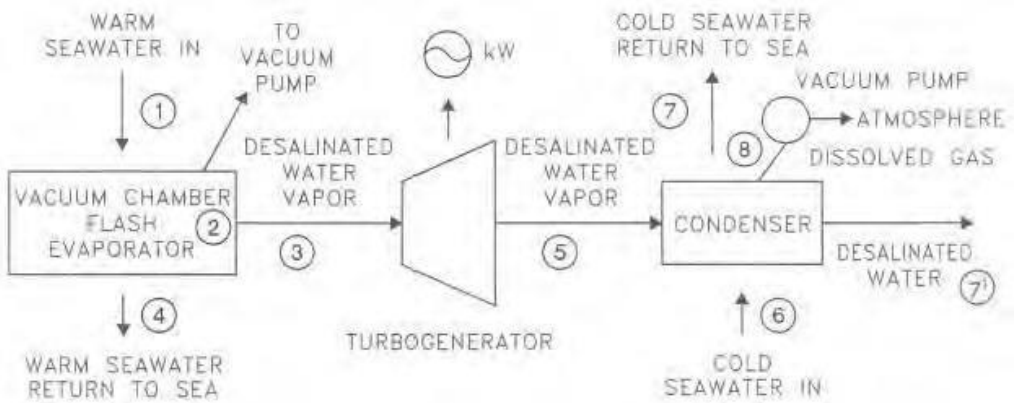

Open-cycle OTEC uses the tropical oceans' warm surface water to make electricity. When warm

seawater is placed in a low-pressure container, it boils. The expanding steam drives a low-pressure turbine attached to an electrical generator. The steam, which has left its salt behind in the low pressure container, is almost pure fresh water. It is condensed back into a liquid by exposure to cold temperatures from deep- ocean water

OTEC POWER STATIONS IN THE WORLD

- Makai Ocean Engineering's Ocean thermal energy conversion (OTEC) powerplant in the US is the world's biggest operational facility of its kind with an annual power generation capacity of 100kW, which is sufficient to power 120 homes in Hawaii.
- OTEC plant in Japan overseen by Saga University

PROBLEMS ASSOCIATED WITH OTEC

- **High cost**: Electricity generated by OTEC plants is more expensive than electricity produced by chemical and nuclear fuels.
- **Complexity**: OTEC plants must be located where a difference of about 20°C occurs year-round. Ocean depths must be available fairly close to shore-based facilities for economic operation. Floating plant ships could provide more flexibility.
- **Acceptability:** For the large-scale production of electricity and other products,OTEC plants are poorly acceptable due to their high costs.
- **Ecosystem damage**: It is obvious by setting OTEC plants.
- **Lower efficiency**: A higher temperature difference between ocean surface warmwater and cold deep ocean water is required for highly efficient operation of plant.